CAD FILE:

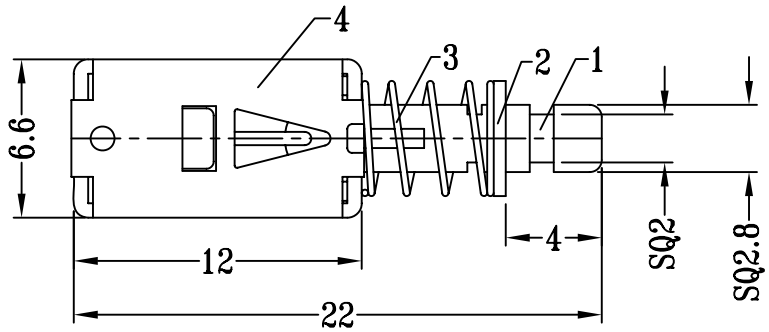


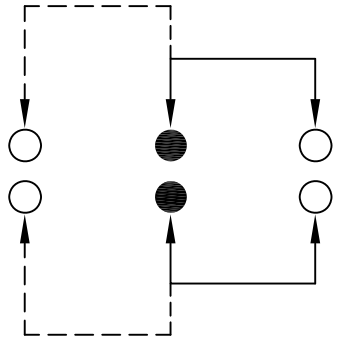

SCHEMATIC (NON-SHORTING)

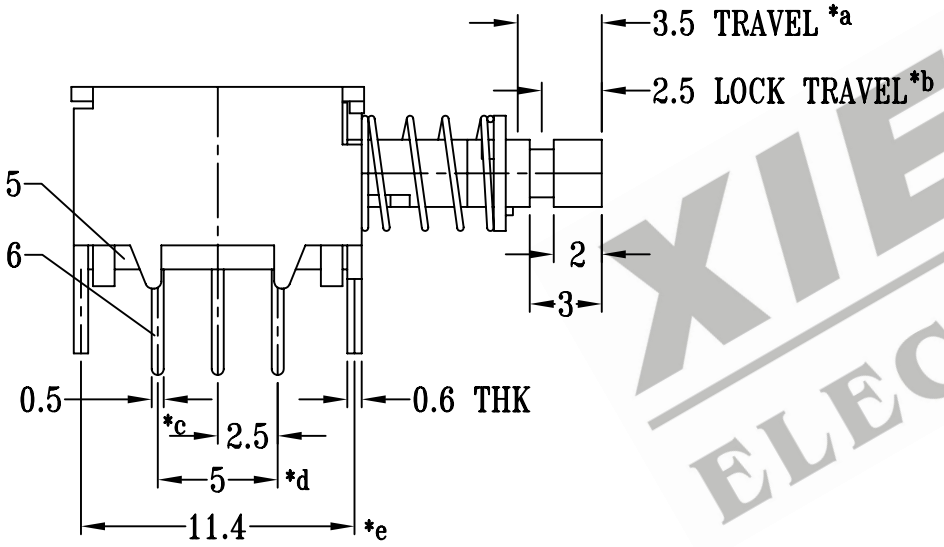


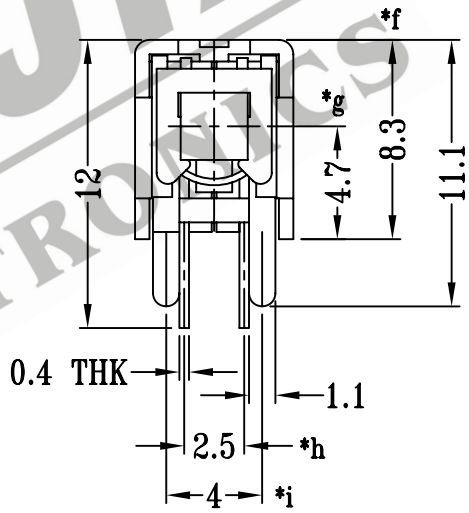


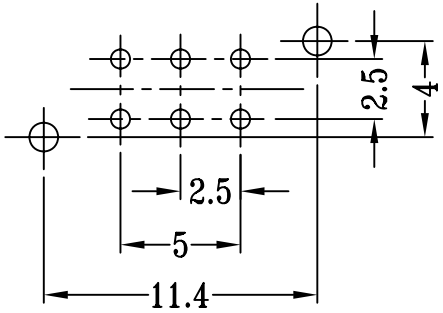


P.C.B LAYOUT

注:带"*"表示关键尺寸(9个)

XIEJIA ELECTRONICS

| NO. | PART NAME | MATERIAL | Q'TY | FINISHING |
|---|---|---|---|---|
| 8 | CONTACT (CLIP) | PBS | 2 | Ag CLAD |
| 7 | LOCK NEEDLE | PBS WIRE | 1 | NATURAL |
| 6 | TERMINAL | BRASS STRIP | 6 | Ag PLATED OVER Ni PLATED |
| 5 | BASE | PHENOLIC RESIN | 1 | NATURAL |
| 4 | FRAME | STEEL STRIP | 1 | Ni PLATED |
| 3 | SPRING | STAINLESS STEEL | 1 | Ni PLATED |
| 2 | BLOCK | STEEL STRIP | 1 | Ni PLATED |
| 1 | KNOB | POM | 1 | YELLOW |

TOLERANCE UNLESS SPECIFIED
WITHIN: 1.5±0.1mm
OVER : 1.5±0.2mm

SHENZHEN XIEJIA ELECTRONICS CO.,LTD.

| ISSUE | DATE | DESCRIPTIONS | APPD. |
|---|---|---|---|
| | | | |

TITLE : PUSH SWITCH
UNIT : MM
DRWG NO.: XJ-DR-PS22E05-00
MODEL: PS-22E05
SCALE: 3:1

| | | |
|---|---|---|
| DWN. | ZHOUYU | 2005-3-26 |
| CHK'D | FANGYING | 2005-3-26 |
| APPD. | KANGXINAN | 2005-3-26 |

ALL MATERIALS MUST BE COMPLIANT TO ROHS